DWG. NO. SD-51004-**00

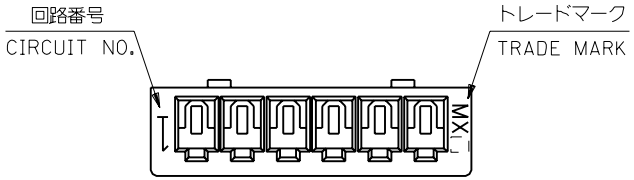

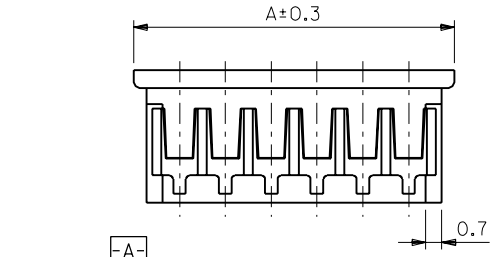

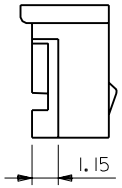

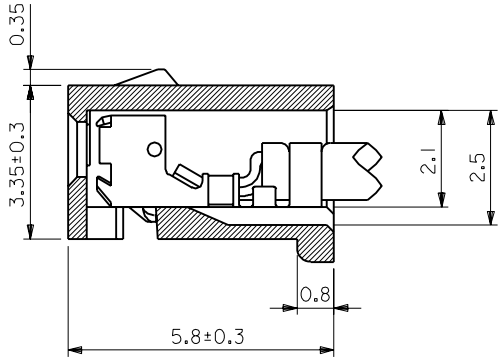

ターミナル装着状態
TERMINAL ASSEMBLY DRAWING
(10:1)

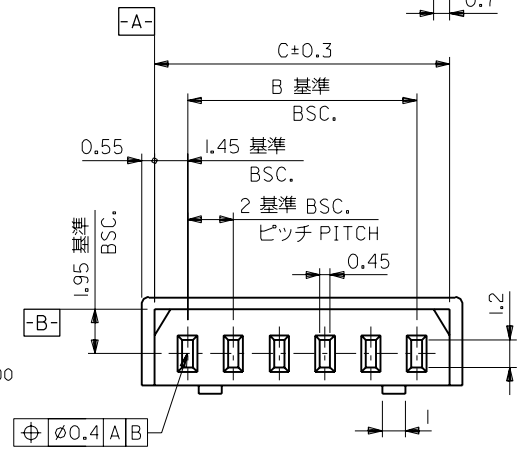

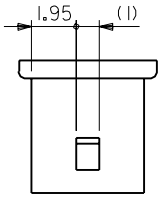

2極の場合
IN CASE OF 2 CIRCUIT HSG.

注)
NOTE.

1. 適合ターミナル：50011-8*00
ACCEPTS TERMINAL

2. 嵌合相手：53014-**10
MATES WITH 53015-**10
53025-**10

32	30.9	28	51004-1500	15
30	28.9	26	-1400	14
28	26.9	24	-1300	13
26	24.9	22	-1200	12
24	22.9	20	-1100	11
22	20.9	18	-1000	10
20	18.9	16	-0900	9
18	16.9	14	-0800	8
16	14.9	12	-0700	7
14	12.9	10	-0600	6
12	10.9	8	-0500	5
10	8.9	6	-0400	4
8	6.9	4	-0300	3
6	4.9	2	51004-0200	2
A	C	B	ENG.NO.	極数 CIRCUIT

DO NOT SCALE DRAWING

EC NO.				
DRWN:				
CH'K:				
APPR:				
EC NO.				
DRWN:				
CH'K:				
APPR:				
EC NO.				
DRWN:				
CH'K:				
APPR:				
EC NO.				
DRWN:				
CH'K:				
APPR:				
EC NO.	JC2000-0629			
DRWN:	K.KOHAMA	'00/ 3/28		
CH'K:	T.YAMAGUCHI	'00/ 3/30		
APPR:	M.FUKUSHIMA	'00/ 3/30		
REDRAWN				
REV	G			

DESCRIPTION

MATERIAL 材料: PBT. UL94V-0 POLYESTER UL94V-0

FINISH 仕上げ: —//—

WIRE RANGE 適用電線範囲: —//—

INS. RANGE 被覆外径: —//—

GENERAL TOLERANCES: (UNLESS SPECIFIED) 一般公差

10 UNDER 未満	±0.2
10 OVER 以上 30 UNDER 未満	±0.25
30 OVER 以上	±0.3
ANGLE 角度	±3°

SCALE 5:1

DESIGN UNITS ☒mm ☐INCH

THIRD ANGLE PROJECTION

DIMENSIONS: ☐ mm/INCH ☐ INCH/mm ☒ mm ONLY

SHT | REV

REVISE ON CAD ONLY

DRAWN BY & DATE K.KOHAMA '00/ 3/28

CHECKED BY & DATE T.YAMAGUCHI '00/ 3/30

APPROVED BY & DATE M.FUKUSHIMA '00/ 3/30

CAD FILENAME S51004.S01

TITLE: 2.0 LOW-PRO REC. HSG.

molex MOLEX INCORPORATED

MATERIAL NO. 51004-**00

DRAWING NO. SD-51004-**00

SHEET NO. 1

SIZE B

THIS DRAWING CONTAINS INFORMATION THAT IS PROPRIETARY TO MOLEX INCORPORATED AND SHOULD NOT BE USED WITHOUT WRITTEN PERMISSION.

S51004.S01

EN-02J(097) MXJ-54