POWERTIP TECH. CORP.

DISPLAY DEVICES FOR BETTER ELECTRONIC DESIGN

Specification For Approval

Customer : _____

Model Type : COG MODULE

Sample Code : _____

Mass Production Code : PE12864LRF-004-H

Revision : 0

Customer Sign	Sales Sign	Checked By (QA)	Approved By	Prepared By

History of Version

Version	Contents	Page	Date	Note
0	Mass Production		2002/11/27	

GFC00083B-0

Contents Page

1. Mechanical Specification & Diagram..... 4
2. Absolute Maximum Rating..... 7
3. Electrical Characteristics..... 7
4. Optical Characteristics..... 8
5. Optical Definitions..... 8
6. Interface Pin Function..... 10
7. Block Diagram..... 13
8. Power supply for LCD module..... 14
9. Specification of Quality Assurance..... 15
10. Standard Specifications for Reliability..... 17
11. Backlight Characteristics..... 23

1. Mechanical Specification & Diagram

1.1 Mechanical Specification

ITEM	STANDARD VALUE	UNIT
NUMBER OF DOTS	128 × 64	DOTS
MODULE DIMENSION	76.1(W) × 50.6(H) × 1.9(T)	mm
EFFECTIVE DISPLAY AREA	70.7(W) × 38.8(H)	mm
DOT SIZE	0.48(W) × 0.48(H)	mm
DOT PITCH	0.52(W) × 0.52(H)	mm
APPROX. WEIGHT	18.0	g
LCD TYPE	FSTN (Positive / Transflective)	
DRIVER METHOD	1/65 Duty 1/9 Bias	
VIEWING DIRECTION	6 O'clock	
BACK LIGHT	LED B/L	
DRIVER IC	ST7565S-G	

1.2 Mechanical Diagram

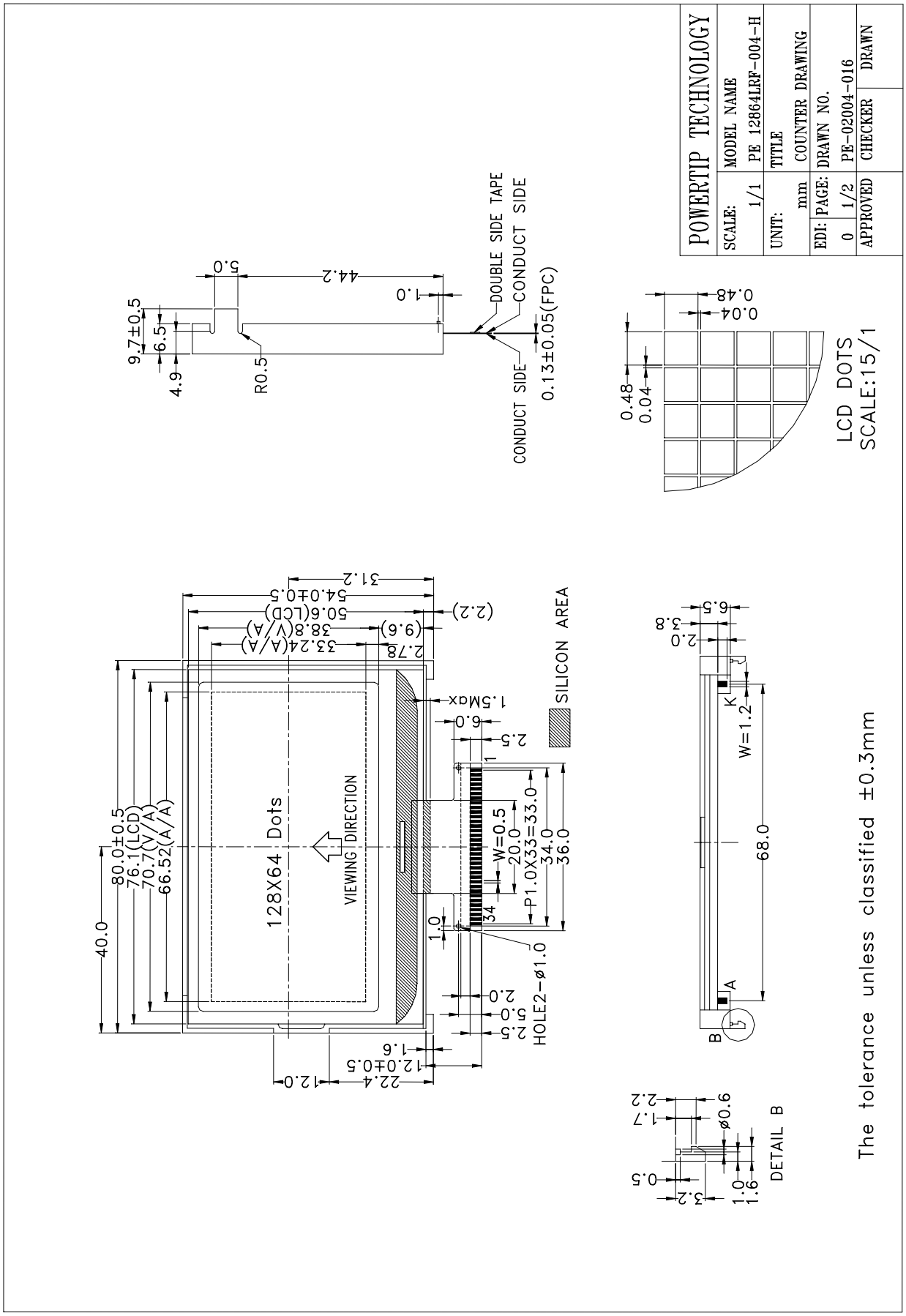

PIN NO.	SIGNAL	PIN NO.	SIGNAL
1	/CS1	21	CAP2-
2	/RES	22	CAP2+
3	A0	23	CAP4-
4	WR(RW)	24	VRS
5	RE(E)	25	V1
6	D0	26	V2
7	D1	27	V3
8	D2	28	V4
9	D3	29	V5
10	D4	30	VR
11	D5	31	C86
12	D6	32	P/S
13	D7	33	HPM
14	Vdd	34	IRS
15	Vss		
16	Vout		
17	CAP5-		
18	CAP3-		
19	CAP1+		
20	CAP1-		

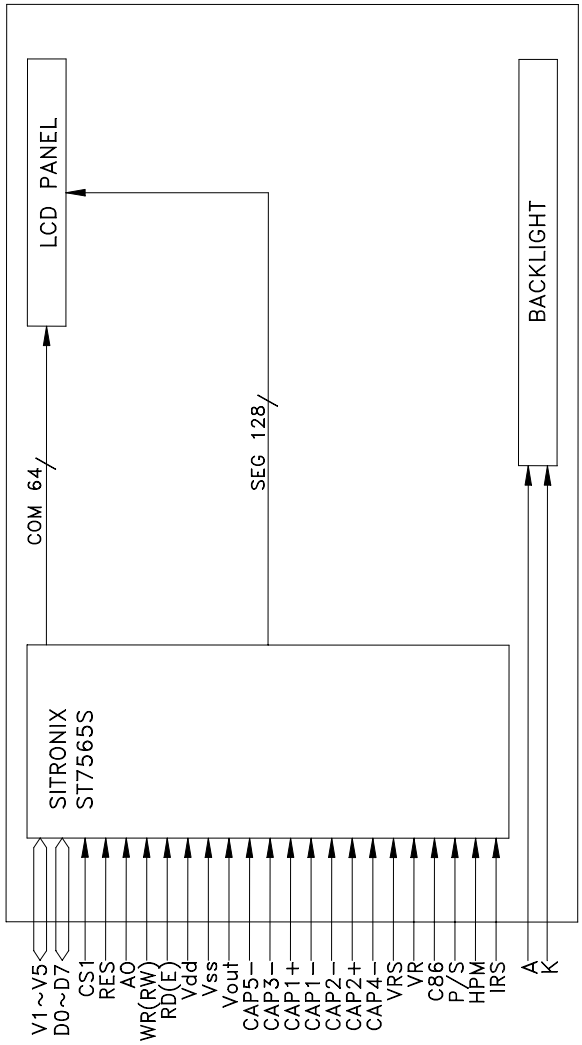

POWERTIP TECHNOLOGY			
SCALE: 1/1	MODEL NAME PE 12864LRF-004-H		
UNIT: mm	TITLE COUNTER DRAWING		
EDI: 0	PAGE: 2/2	DRAWN NO. PE-02004-016	
APPROVED	CHECKER	DRAWN	

2. Absolute Maximum Rating

ITEM	SYMBOL	MIN	TYP	MAX	UNIT
OPERATING TEMPEATURE	Top	-20	-	+70	℃
STORAGE TEMPERATURE	Tst	-30	-	+80	℃
INPUT VOLTAGE	V_I	-0.3	-	V_{DD}+0.3	V
SUPPLY VOLTAGE FOR LOGIC	V_{DD} –V_{SS}	-0.3	-	+5.0	V
SUPPLY VOLTAGE FOR LCD	V_5, V_{OUT}	-13.0	-	+0.3	V
SUPPLY VOLTAGE	Be sure that you are grounded when hading LCM.				
STATIC ELECTRICITY					

3. Electrical Characteristics

ITEM	SYMBOL	CONDITION	MIN.	TYP.	MAX.	UNIT
SUPPLY VOLTAGE FOR LOGIC	V_{DD}-V_{SS}	Ta=25℃	3.1	3.3	3.5	V
SUPPLY VOLTAGE FOR LCD	V_{DD}-V_5 (Vop)	Ta=25℃	10.15	10.0	9.85	V
INPUT HIGH VOL.	V_{IH}	Ta=25℃	0.8 VDD	-	V_{DD}	V
INPUT LOW VOL.	V_{IL}	Ta=25℃	VSS	-	0.2 VDD	V
OUTPUT HIGH VOL.	V_{OH}	I_{OH}=-0.5mA	0.8V_{DD}	-	V_{DD}	V
OUTPUT LOW VOL.	V_{OL}	I_{OL}=0.5mA	VSS	-	0.2 VDD	V
SUPPLY CURRENT	I_{DD}	V_{DD}=3.3V	-	0.7	1.1	mA

4. Optical Characteristics

FSTN

ITEM	SYMBOL	CONDITION	MIN.	TYP.	MAX.	UNIT
VIEW ANGLE (V)	θ	CR ≥ 2	-40	-	+40	Deg.
VIEW ANGLE (H)	Φ	CR ≥ 2	-40	-	+40	Deg.
CONTRAST RATIO	CR	Ta=25℃	-	5	-	-
RESPONSE TIME	Tr	Ta=25℃	-	200	400	ms
RESPONSE TIME	Td	Ta=25℃	-	200	400	ms

5. Optical Definitions

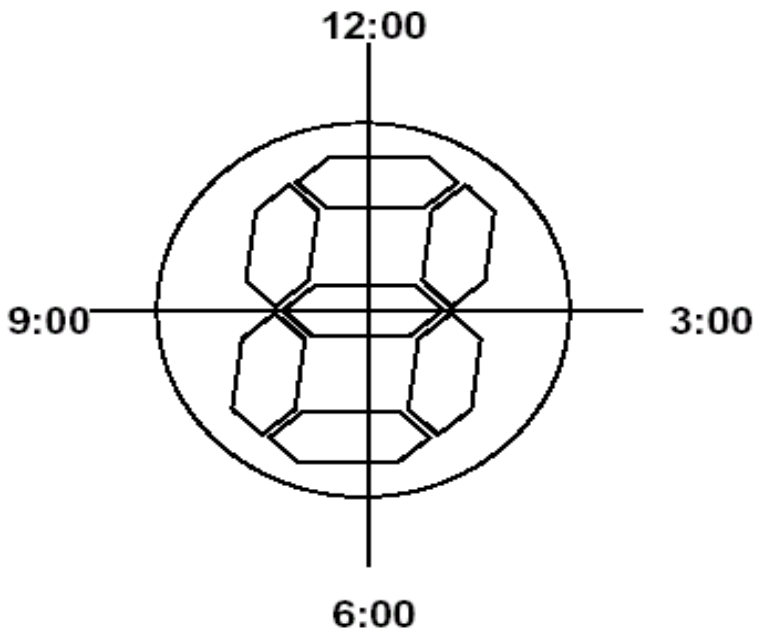

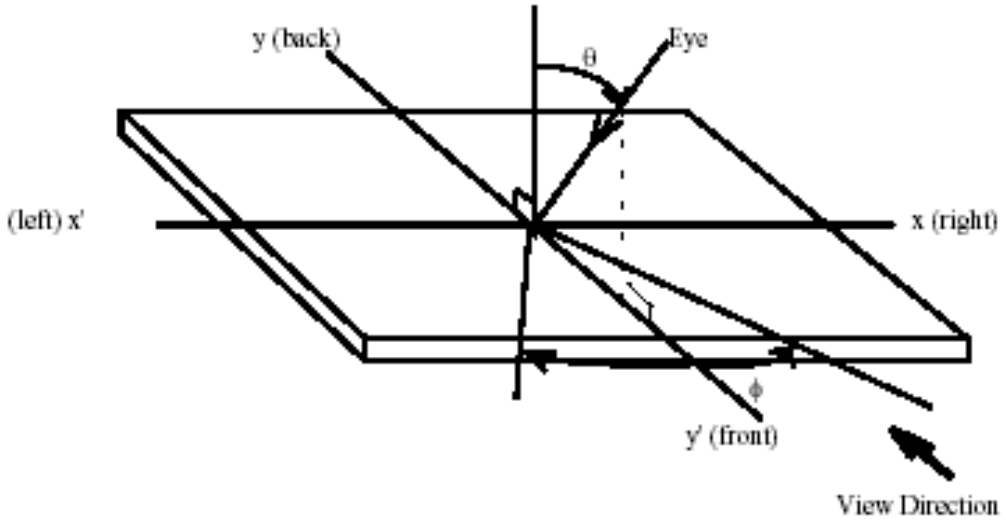

View Angle

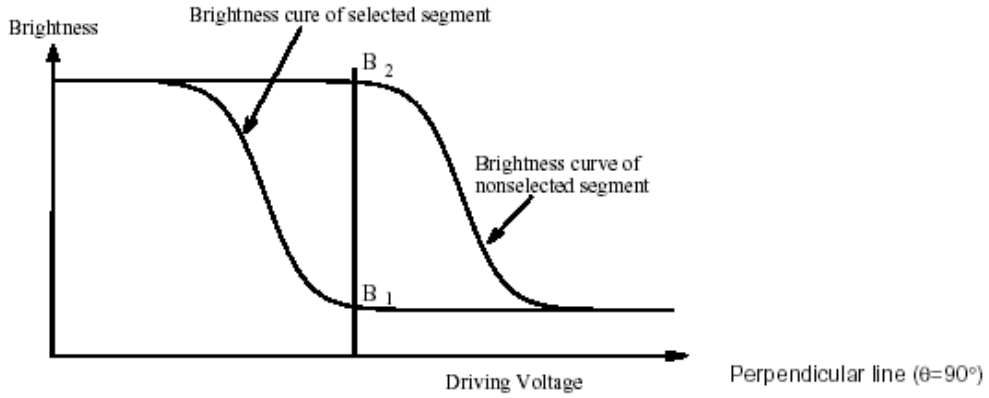

$$\text{Contrast ratio} = \frac{\text{Brightness at nonselected segment (B2)}}{\text{Brightness at selected segment (B1)}}$$

Contrast ratio (CR)

6. Interface Pin Function

NO	SYMBOL	FUNCTION
1	/CS1	This is the chip select signal. When /CS1="L", chip select becomes active, and data/command I/O is enable
2	/RES	When $\overline{RES}$ is set to "L," the settings are initialized. The reset operation is performed by the $\overline{RES}$ signal level.
3	A0	This is connect to the least significant bit of the normal MPU address bus, and it determines whether the data bits are data or a command. A0 = "H": Indicates that D0 to D7 are display data. A0 = "L": Indicates that D0 to D7 are control data.
4	/WR (R/W)	• When connected to an 8080 MPU, this is active LOW. (R/W) This terminal connects to the 8080 MPU $\overline{WR}$ signal. The signals on the data bus are latched at the rising edge of the $\overline{WR}$ signal. • When connected to a 6800 Series MPU: This is the read/write control signal input terminal. When R/$\overline{W}$ = "H": Read. When R/W = "L": Write.
5	/RD (E)	• When connected to an 8080 MPU, this is active LOW. (E) This pin is connected to the $\overline{RD}$ signal of the 8080 MPU, and the ST7565S series data bus is in an output status when this signal is "L". • When connected to a 6800 Series MPU, this is active HIGH. This is the 6800 Series MPU enable clock input terminal.
6	D0	This is an 8-bit bi-directional data bus that connects to an 8-bit or 16-bit standard MPU data bus. When the serial interface is selected (P/S = "L") : D7 : serial data input (SI) ; D6 : the serial clock input (SCL). D0 to D5 are set to high impedance. When the chip select is not active, D0 to D7 are set to high impedance.
7	D1	
8	D2	
9	D3	
10	D4	
11	D5	
12	D6	
13	D7	
14	VDD	Shared with the MPU power supply terminal Vcc.
15	VSS	This is a 0V terminal connected to the system GND.

NO	SYMBOL	FUNCTION
16	VOUT	DC/DC voltage converter. Connect a capacitor between this terminal and VSS.
17	CAP5-	DC/DC voltage converter. Connect a capacitor between this terminal and the CAP1+ terminal.
18	CAP3-	DC/DC voltage converter. Connect a capacitor between this terminal and the CAP1+ terminal.
19	CAP1+	DC/DC voltage converter. Connect a capacitor between this terminal and the CAP1- terminal.
20	CAP1-	DC/DC voltage converter. Connect a capacitor between this terminal and the CAP1+ terminal.
21	CAP2-	DC/DC voltage converter. Connect a capacitor between this terminal and the CAP2+ terminal.
22	CAP2+	DC/DC voltage converter. Connect a capacitor between this terminal and the CAP2- terminal.
23	CAP4-	DC/DC voltage converter. Connect a capacitor between this terminal and the CAP2+ terminal.
24	VRS	This is the internal-output VREG power supply for the LCD power supply voltage regulator.
25	V1	This is a multi-level power supply for the liquid crystal drive. The voltage Supply applied is determined by the liquid crystal cell, and is changed through the use of a resistive voltage divided or through changing the impedance using an op. amp. Voltage levels are determined based on VDD, and must maintain the relative magnitudes shown below.
26	V2	
27	V3	
28	V4	
29	V5	
30	VR	Output voltage regulator terminal. Provides the voltage between VDD and V5 through a resistive voltage divider. IRS = "L" : the V5 voltage regulator internal resistors are not used . IRS = "H" : the V5 voltage regulator internal resistors are used .
31	C86	This is the MPU interface switch terminal. C86 = "H": 6800 Series MPU interface. C86 = "L": 8080 MPU interface.

NO	SYMBOL	FUNCTION
32	P/S	This is the parallel data input/serial data input switch terminal. P/S = "H": Parallel data input. P/S = "L": Serial data input.
33	/HPM	This is the power control terminal for the power supply circuit for liquid crystal drive. $\overline{\text{HPM}}$ = "H": Normal mode $\overline{\text{HPM}}$ = "L": High power mode
34	IRS	This terminal selects the resistors for the V5 voltage level adjustment. IRS = "H": Use the internal resistors IRS = "L": Do not use the internal resistors. The V5 voltage level is regulated by an external resistive voltage divider attached to the VR terminal

7. Block Diagram

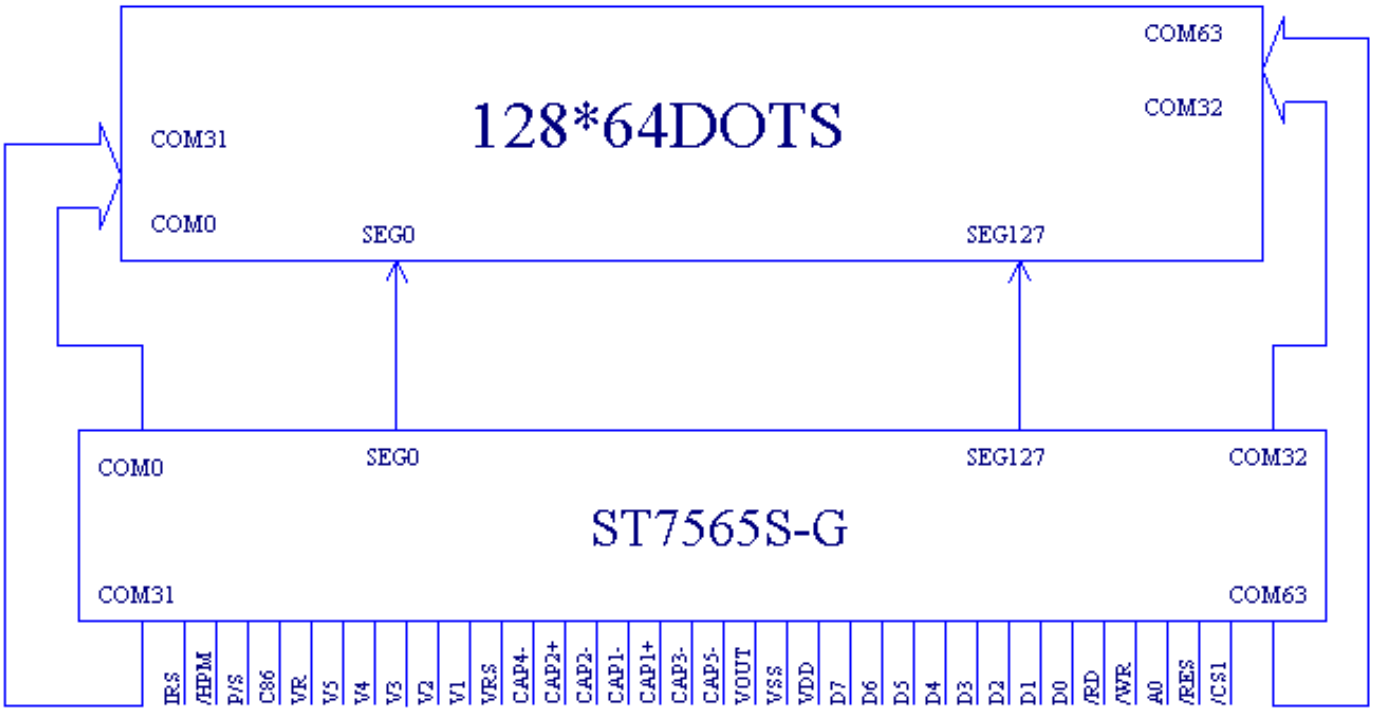

FRS	:OPEN	CS2	:H
FR	:OPEN	M/S	:H Master mode
CL	:OPEN	CLS	:H Built-in oscillator
/DOF	:OPEN	SEL3	:L
TEST0~5	:OPEN	SEL2	:L 1/65 DUTY
		SEL1	:L

8. Power supply for LCD module

(1) When the voltage regulator internal resistor is used.
(Example where Vss2 = Vss, with 4x step-up)

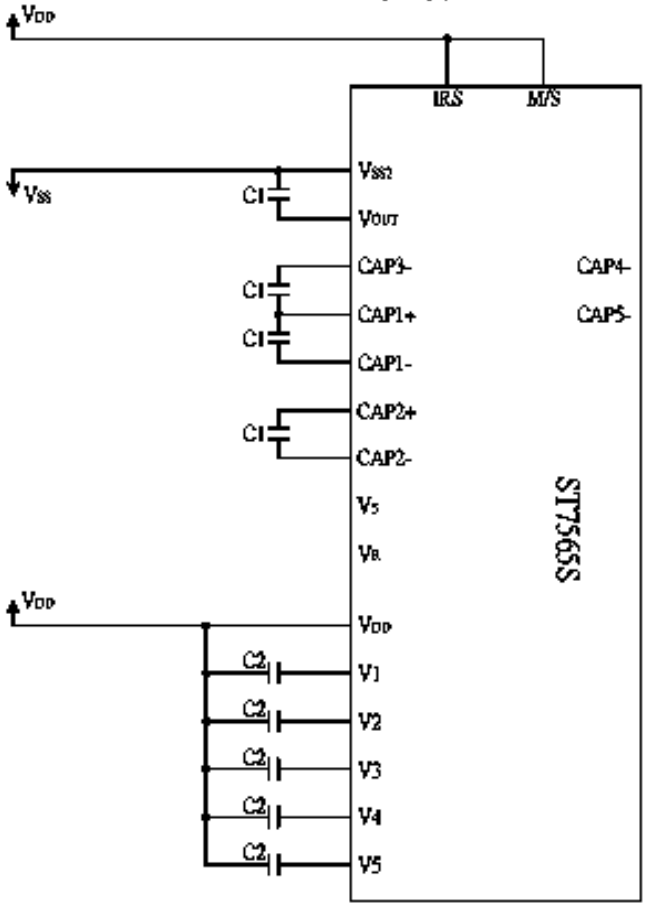

9. Specification of Quality Assurance

1. Purpose

This standard for Quality Assurance should affirm the quality of LCD module products to supply to purchaser by POWERTIP DISPLAY CORPORATION (Supplier).

2. Standard for Quality Test

2.1 Inspection:

Before delivering, the supplier should take the following tests, and affirm the quality of product.

2.2 Electro-Optical Characteristics:

According to the individual specification to test the product.

2.3 Test of Appearance Characteristics:

According to the individual specification to test the product.

2.4 Test of Reliability Characteristics:

According to the definition of reliability on the specification for testing products.

2.5 Delivery Test:

Before delivering, the supplier should take the delivery test.

2.5.1 Test method: According to MIL-STD-105E, General Inspection Level Ⅱ take a single time.

2.5.2 The defects classify of AQL as following:

Major defect: AQL=0.65
Minor defect: AQL=2.5
Total defects: AQL=2.5

3. Nonconforming Analysis & Deal With Manners

3.1 Nonconforming analysis:

3.1.1 Purchaser should supply the detail data of non-conforming sample and the non-suitable state.

3.1.2 After accepting the detail data from purchaser, the analysis of nonconforming should be finished in two weeks.

3.1.3 If supplier can not finish analysis on time, must announce purchaser before two weeks.

3.2 Disposition of nonconforming:

3.2.1 If find any product defect of supplier during assembly time, supplier must chance the good product for every defect after recognition.

3.2.2 Both supplier and customer should analyze the reason and discuss the disposition of nonconforming when the reason of nonconforming is not sure.

4. Agreement items

Both sides should discuss together when the following problems happen.

4.1 There is any problem of standard of quality assurance, and both sides think that must be modifier.

4.2 There is any argument item which does not record in the standard of quality assurance.

4.3 Any other special problem.

5. Standard of The Product Appearance Test

5.1 Manner of appearance test:

5.1.1 The test must be under 20W ˣ 2 or 40W fluorescent light, and the distance of view must be at 30 cm.

5.1.2 When test the model of Tran missive product must add the reflective plate.

5.1.3 The test direction is base on about around 45° of vertical line.

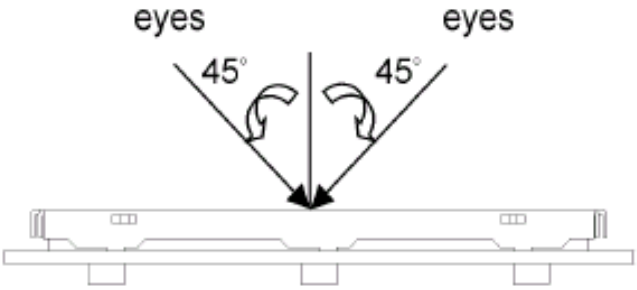

5.1.4 Definition of area:

A Area : Viewing area.

B Area : Out of viewing area.

(Outside viewing area)

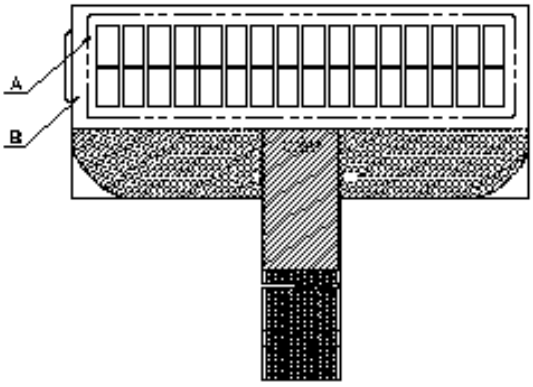

5.2 Basic principle:

5.2.1 It will accord to the AQL when the standard can not be described.

5.2.2 The sample of the lowest acceptable quality level must be discussed by both supplier and customer when any dispute happened.

5.2.3 Must add new item on time when it is necessary.

5.3 Standard of inspection:(Unit: mm)

10. Standard Specification for Reliability

1.Standard Specification for Reliability of Wide-Temperature COG

NO	Item	Description
1.	**High temperature operation**	The sample should be allowed to stand at 70 ± 3°C for 240(-0,+48) hours under driving condition.
2.	**Low temperature operation**	The sample should be allowed to stand at -20 ± 3°C for 240(-0,+48)hours under driving condition.
3.	**High temperature resistance**	The sample should be allowed to stand at 80 ± 3°C for 240(-0,+48) hours under no-load condition, and then returning it to normal temperature condition, and allowing it stand for 30 minutes.
4.	**Low temperature resistance**	The sample should be allowed to stand at -30 ± 3°C for 240(-0,+48) hours under no-load condition, then returning it to normal temperature condition, and allowing it stand for 24 hours.
5.	**Moisture resistance**	The sample should be allowed to stand at 40 ± 3°C, 90%RH MAX for 240(-0,+48) hours under no-load condition excluding the polarize, then taking it out and drying it at normal temperature.
6.	**Thermal shock resistance**	The sample should be allowed to stand the following 10 Cycles of operation： 0°C for 30 minutes→normal temperature for 5 minutes →+70°C for 30 minutes→normal temperature for 5 minutes, as one cycle.
7.	**ESD (Electrostatic Discharge)**	Human Body Model：2000 volt electrical discharge from a 100 pF capacitor to the tested device in series with a 1500 ohm resistor. Apply VDD & VSS to LCD module unit. Test for functionality no missing lines after the discharge, but LCD module may reset. Machine model：200 volt electrical discharge from a 200 pF capacitor to the tested device with no series resistance. Apply to VDD & VSS to LCD module unit without including hand phone. Test for functionality no any missing lines after the discharge, but LCD module can be reset if display off.

2.Testing Conditions and Inspection Criteria

In order to do the final test the testing sample must be in room temperature for 24hours, to ensure stability.

NO	Item	Test Model	Inspection Criteria
1.	Current Consumption	Refer To Specification	The current must be under three times of initiated test.
2.	Contrast	Refer To Specification	The contrast must be large than half of initiated test.
3.	Appearance	Visual inspection	Defect free.

3.Life Time

NO	Item	Description
1.	Life time	Functions, performance, appearance, etc. shall be free from remarkable deterioration within 50,000 hours under ordinary operating and storage conditions room temperature (25±10℃), normal humidity (45±20%RH), and in area not exposed to direct sun light.
2.	Life time	Functions, performance, appearance, etc. shall be free from remarkable deterioration within 5,000 hours under ordinary operating and storage conditions high temperature 70℃, normal humidity(45±20%RH), and in area not exposed to direct sun light.

Note：From our experience the life time of high humidity operation and high temperature operation as above mentioned could be achieved.

Standard of inspection:(Unit: mm)

<table>
<tr><th>NO</th><th>Item</th><th>Criterion</th><th>AQL</th></tr>
<tr><td>1.</td><td>Electrical Testing</td><td>1.1 Missing vertical, horizontal segment, segment contrast defect.
1.2 Missing character , dot or icon.
1.3 Display malfunction.
1.4 No function or no display.
1.5 Current consumption exceeds product specifications.
1.6 LCD viewing angle defect.
1.7 Mixed product types.
1.8 Contrast defect.</td><td>0.65</td></tr>
<tr><td rowspan="2">2.</td><td rowspan="2">LCD black spots, white spots, contamination</td><td>2.1 Round type： As following drawing

ψ = (x + y) / 2

 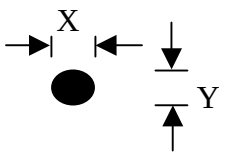

<table>
<tr><th>SIZE</th><th>Acceptable Q’TY</th></tr>
<tr><td>ψ≦0.10</td><td>Accept no dense</td></tr>
<tr><td>0.10＜ψ≦0.20</td><td>2</td></tr>
<tr><td>0.20＜ψ≦0.25</td><td>1</td></tr>
<tr><td>0.25＜ψ</td><td>0</td></tr>
</table></td><td>2.5</td></tr>
<tr><td>2.2 Line type：(As following drawing)

 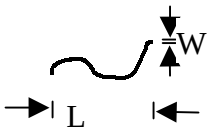

<table>
<tr><th>Length</th><th>Width</th><th>Acceptable Q’TY</th></tr>
<tr><td>-----</td><td>W≦0.02</td><td>Accept no dense</td></tr>
<tr><td>L≦3.0</td><td>0.02＜W≦0.03</td><td rowspan="2">3</td></tr>
<tr><td>L≦2.5</td><td>0.03＜W≦0.05</td></tr>
<tr><td>----</td><td>0.05＜W</td><td>As round type</td></tr>
</table></td><td>2.5</td></tr>
</table>

<table>
<tr><th>NO</th><th>Item</th><th>Criterion</th><th>AQL</th></tr>
<tr><td>3.</td><td>Polarize bubbles</td><td>ψ = (x + y) / 2
 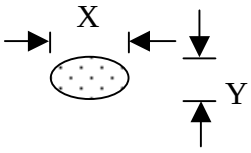

<table>
<tr><th>Size ψ</th><th>Acceptable Q'TY</th></tr>
<tr><td>ψ≦0.20</td><td>Accept no dense</td></tr>
<tr><td>0.20＜ψ≦0.50</td><td>3</td></tr>
<tr><td>0.50＜ψ≦1.00</td><td>2</td></tr>
<tr><td>1.00＜ψ</td><td>0</td></tr>
<tr><td>Total Q'TY</td><td>3</td></tr>
</table></td><td>2.5</td></tr>
<tr><td>4.</td><td>Scratches</td><td>Follow NO.2 LCD black spots, white spots, contamination</td><td></td></tr>
<tr><td rowspan="3">5.</td><td rowspan="3">Glass Crack</td><td>Symbols：
x：Chip length　y：Chip width　z：Chip thickness
t：Glass thickness　a：LCD side length
L：Electrode pad length</td><td></td></tr>
<tr><td>5.1 General glass crack：
5.1.1 Corner crack：
 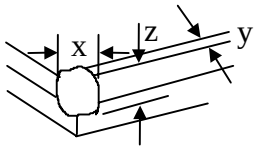

<table>
<tr><th>z：</th><th>y</th><th>x</th></tr>
<tr><td>Z≦1/2t</td><td>Not over viewing area</td><td>x≦1/8a</td></tr>
<tr><td>1/2t＜Z≦2t</td><td>Not exceed 1/2 SP width</td><td>x≦1/8a</td></tr>
</table>
⊙If there are 2 or more chips, x is the total length of each chip.</td><td>2.5</td></tr>
<tr><td>5.1.2 Crack on panel surface and crack between panels：
 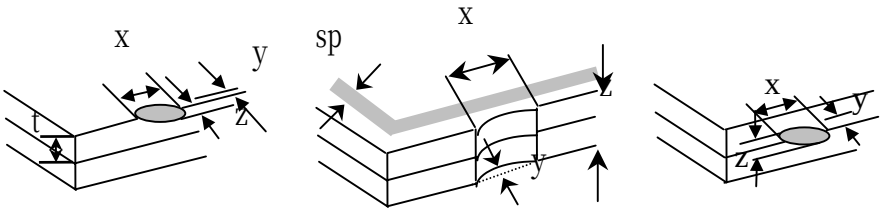

<table>
<tr><th>z</th><th>y</th><th>x</th></tr>
<tr><td>Z≦1/2t</td><td>Not over viewing area</td><td>x≦1/8a</td></tr>
<tr><td>1/2t＜Z≦2t</td><td>Not exceed 1/2 SP width</td><td>x≦1/8a</td></tr>
</table></td><td>2.5</td></tr>
</table>

<table>
<tr><th>NO</th><th>Item</th><th>Criterion</th><th>AQL</th></tr>
<tr><td rowspan="3">5.</td><td rowspan="3">Glass Crack</td><td>5.2 Protrusion over terminal：
5.2.1 Crack on electrode pad：
※Top of the glass：
 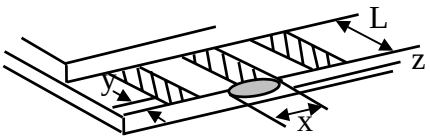

※ Bottom of the glass：
 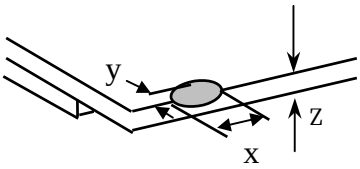

<table><tr><th></th><th>y</th><th>x</th><th>z</th></tr><tr><td>top of the glass</td><td>y≦0.5 mm</td><td>x≦1/8a</td><td>0＜z≦t</td></tr><tr><td>back of the glass</td><td>Not over viewing area</td><td>x≦1/8a</td><td>0＜z≦t</td></tr></table></td><td>2.5</td></tr>
<tr><td>5.2.2 Non-conductive portion：
 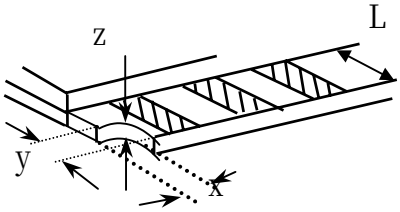

 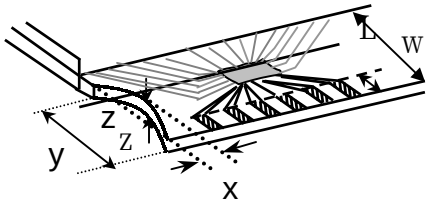

<table><tr><th>KIND</th><th>y</th><th>x</th><th>z</th></tr><tr><td>General</td><td>y≦L</td><td>x≦1/8a</td><td>z≦t</td></tr><tr><td>COG</td><td>y≦w</td><td>Not touch the ITO terminal</td><td>z≦t</td></tr></table>※ the alignment mark must not be damaged.</td><td>2.5</td></tr>
<tr><td>5.2.3 Glass chip remain
 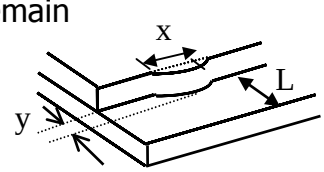

<table><tr><th>y： width</th><th>x：length</th></tr><tr><td>y≦ 1/3L</td><td>x ≦ a</td></tr></table></td><td>2.5</td></tr>
<tr><td>6.</td><td>Backlight elements</td><td>6.1 Illumination source flickers when lit.
6.2 Spots or scratches that appear when lit must be judged .
using LCD spot, lines and contamination standards.
6.3 Backlight doesn’t light or color is wrong.</td><td>0.65
2.5

0.65</td></tr>
</table>

NO	Item	Criterion	AQL
7.	General appearance	7.1 No oxidation, contamination, curves or, bends on interface pin (OLB) of TCP.	2.5
		7.2 No cracks on interface pin (OLB) of TCP.	0.65
		7.3 No contamination, solder residue or solder balls on product.	2.5
		7.4 The IC on the TCP may not be damaged.	2.5
		7.5 The uppermost edge of the protective strip on the interface pin must be present or look as if it cause the interface pin to sever.	2.5
		7.6 The residual rosin or tin oil of soldering (component or chip component) is not burned into brown or black color.	2.5
		7.7 Sealant on top of the ITO circuit has not hardened	2.5
		7.8 Pin type must match type in specification sheet.	0.65
		7.9 LCD pin loose or missing pins.	0.65
		7.10 Product packaging must the same as specified on packaging specification sheet.	0.65
		7.11 Product dimension and structure must conform to product specification sheet .	0.65

11. Backlight Characteristics

LCD Module with Edge LED Backlight

Maximum Ratings

Item	Symbol	Conditions	Min.	Max.	Unit
Forward Current	IF	Ta =25°C	-	200	mA
Reverse Voltage	VR	Ta =25°C	-	8	V
Power Dissipation	PO	Ta =25°C	-	0.92	W
Operating Temperature	T_{OP}	-	-20	70	°C
Storage Temperature	T_{ST}	-	-30	80	°C

Electrical Characteristics

Ta =25°C

Item	Symbol	Conditions	Min.	Typ.	Max.	Unit
Forward Voltage	VF	IF=80 mA	-	4.2	4.6	V
Reverse Current	IR	VR=8V	-	-	0.2	mA
Luminous Intensity (with LCD, Dots Off)	IV	IF=80 mA	2.0	2.5	-	cd/m^2
Wavelength	λp	IF=80 mA	569	-	576	nm
Color	Yellow-Green					