HSF RoHS

MATERIALS AND FINISH

SHELL : STEEL MATERIAL, TIN FINISHED
DIMPLES ON PLUG ONLY
CONNECTOR INSULATOR : PBT THERMOPLASTIC,
30% GLASS FILLED, UL 94V-0 RATED, BLACK COLOR
HIGH POWER CONTACT MATERIAL: BRASS,GOLD PLATED

ELECTRICAL CHARACTERISTICS

HIGH POWER CONTACT CURRENT RATING :10,20,OR 40 AMPS
HIGH POWER CONTACT RESISTANCE : 2.7 MILLIOHMS MAX.
DIELECTRIC WITHSTANDING VOLTAGE :
1000 V AC FOR 1 MINUTE
INSULATION RESISTANCE : 5000 MEGAOHMS MIN.
TEMPERATURE RATING : -55°C ~ +125°C

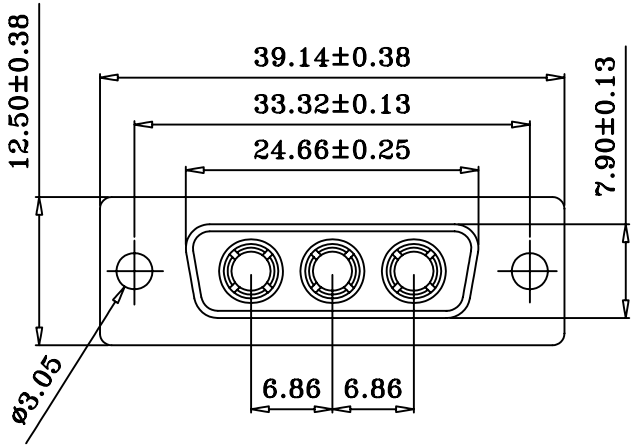

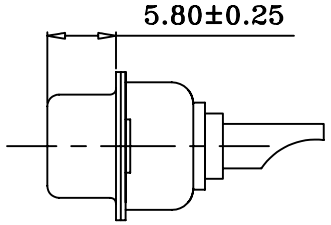

Current Rating	Dimensio
	ø A
40 AMPS	ø4.6
30 AMPS	ø3.2
20 AMPS	ø2.8
10 AMPS	ø1.7

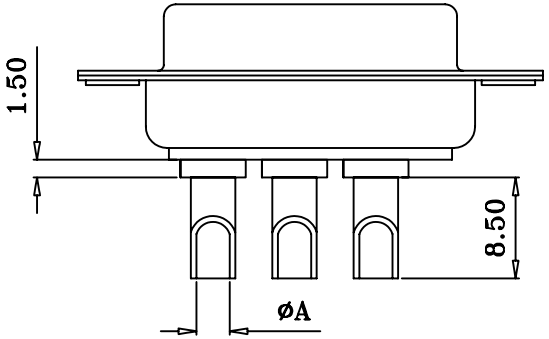

Ordering Information

6235-01 F 3W3 XX B 0 X

- Connector Type: F=Female, M=Male
- Contact Plating: G0:Gold Flash, G1:3U" Gold, G2:5U" Gold, G3:10U" Gold, G4:15U" Gold, G5:30U" Gold
- Color: B=Black, W=Whtie, U=Blue
- Current Rating: 1=10A, 2=20A, 3=30A, 4=40A

REV	DATE	MODIFICATION DESCRIPTION	CHANGE
A0	2014.03.28	NEW DRAWING	

OPERATION				
X.X	±0.30	DRAW	Ben	14.03.28
X.XX	±0.20	CHECK		
X.XXX	±0.10			
Angle	±3°	APPROVE		
DIM	TOL			

SCALE	FIT
UNIT	mm
SIZE	A4
SHEET	1/1
PROJ.	

JiLN® 深圳市锦凌电子有限公司
SHENZHEN JINLING ELECTRONIC CO.,LTD
Tel: 86-755-2997-5806/5802 Fax: 86-755-2997-5992

PART NO.	6235-01F3W3XXB0X
TITLE:	D_SUB CONNECTOR 3W3 Female Power Contact Solder Type