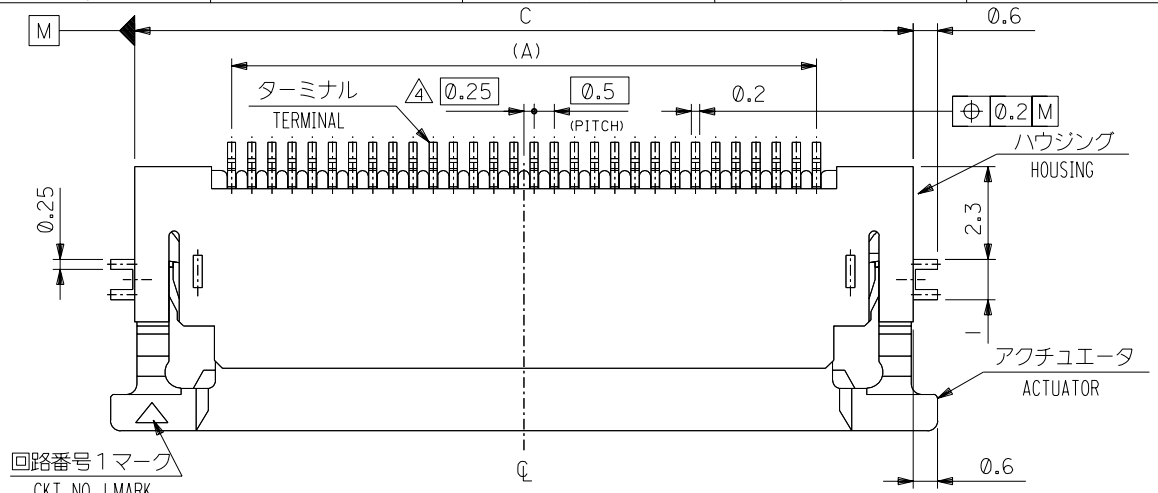
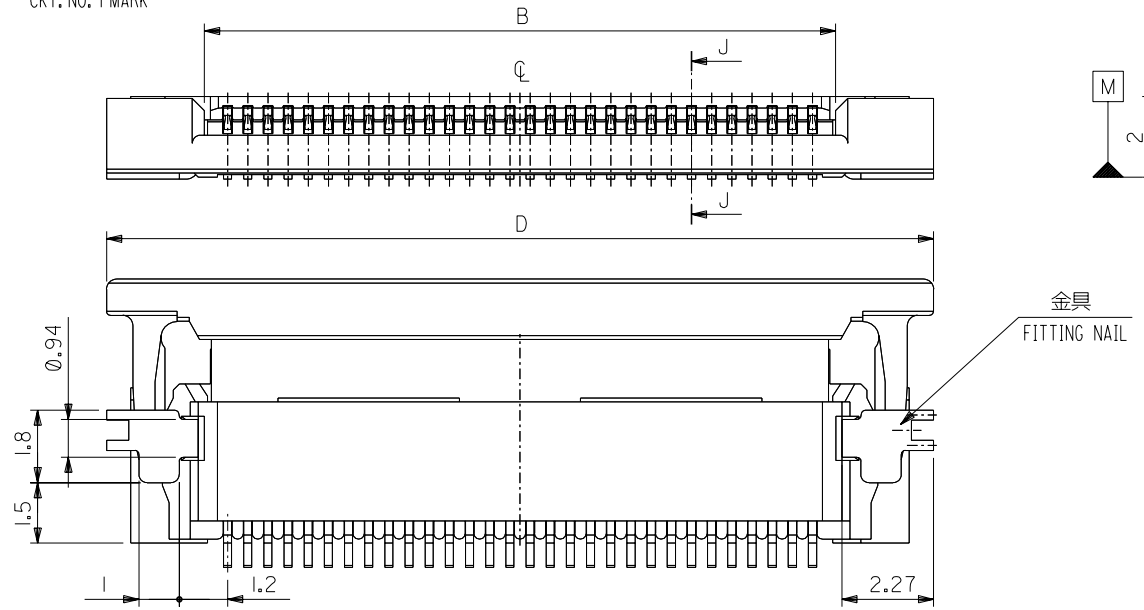
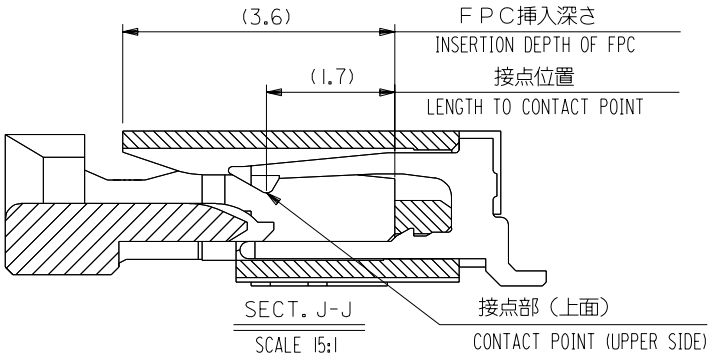
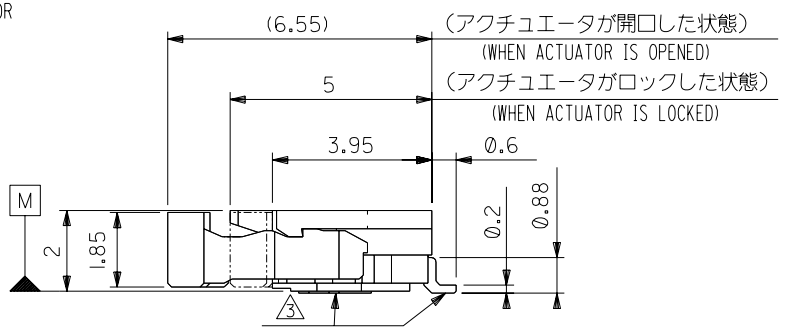



| | | | | | |
|---|---|---|---|---|---|
| 30.5 | 29.3 | 25.65 | 24.5 | 54104 - 5037 | 50 |
| 28.5 | 27.3 | 23.65 | 22.5 | 54104 - 4637 | 46 |
| 28.0 | 26.8 | 23.15 | 22.0 | 54104 - 4537 | 45 |
| 27.0 | 25.8 | 22.15 | 21.0 | 54104 - 4337 | 43 |
| 25.5 | 24.3 | 20.65 | 19.5 | 54104 - 4037 | 40 |
| 24.5 | 23.3 | 19.65 | 18.5 | 54104 - 3837 | 38 |
| 23.5 | 22.3 | 18.65 | 17.5 | 54104 - 3637 | 36 |
| 23.0 | 21.8 | 18.15 | 17.0 | 54104 - 3537 | 35 |
| 22.5 | 21.3 | 17.65 | 16.5 | 54104 - 3437 | 34 |
| 22.0 | 20.8 | 17.15 | 16.0 | 54104 - 3337 | 33 |
| 21.5 | 20.3 | 16.65 | 15.5 | 54104 - 3237 | 32 |
| 20.5 | 19.3 | 15.65 | 14.5 | 54104 - 3037 | 30 |
| D | C | B | A | MATERIAL NO. | CKT. |

DWG. NO. SD-54104-023

DO NOT SCALE DRAWING

| REV | DESCRIPTION | DRWN | CH'K | APPR |
|---|---|---|---|---|
| B | 変更 REVISED '03/04/17 IR2NO. J20030-2624 | K.TOJO | M.SASAO | M.SASAO |
| A | 変更 REVISED '02/10/15 IR1NO. J20030-0977 | K.TOJO | M.SASAO | M.SASAO |
| 0 | 新規作成 RELEASED '00/12/13 IR0NO. JC20001-0415 | N.YANO | S.KUNISHI | M.FUKUSHIMA |

MATERIAL 材料: SHEET 2 OF 2 参照 SEE SHEET 2 OF 2

FINISH 仕上げ: //

WIRE RANGE 適用電線範囲: //

INS. RANGE 被覆外径: //

GENERAL TOLERANCES: (UNLESS SPECIFIED) 一般公差

| | |
|---|---|
| 10 UNDER 未満 | ±0.2 |
| 10 OVER 以上 30 UNDER 未満 | ±0.25 |
| 30 OVER 以上 | ±0.3 |
| ANGLE 角度 | ±3° |

SCALE | DESIGN UNITS ☒mm ☐INCH | THIRD ANGLE PROJECTION | DIMENSIONS: ☐mm/INCH ☐INCH/mm ☒mm ONLY | SHT REV: REVISE ON CAD ONLY

DRAWN BY & DATE: N.YANO '00/12/13

CHECKED BY & DATE: S.KUNISHI '00/12/13

APPROVED BY & DATE: M.FUKUSHIMA '00/12/13

TITLE: 0.5 FPC Conn Zif Hsg Assy for SMT RA Upr Cont

MOLEX INCORPORATED

CAD FILENAME: SD-54104-023.S01

MATERIAL NO.: 54104-**37

DRAWING NO.: SD-54104-023

SHEET NO.: 1 OF 2

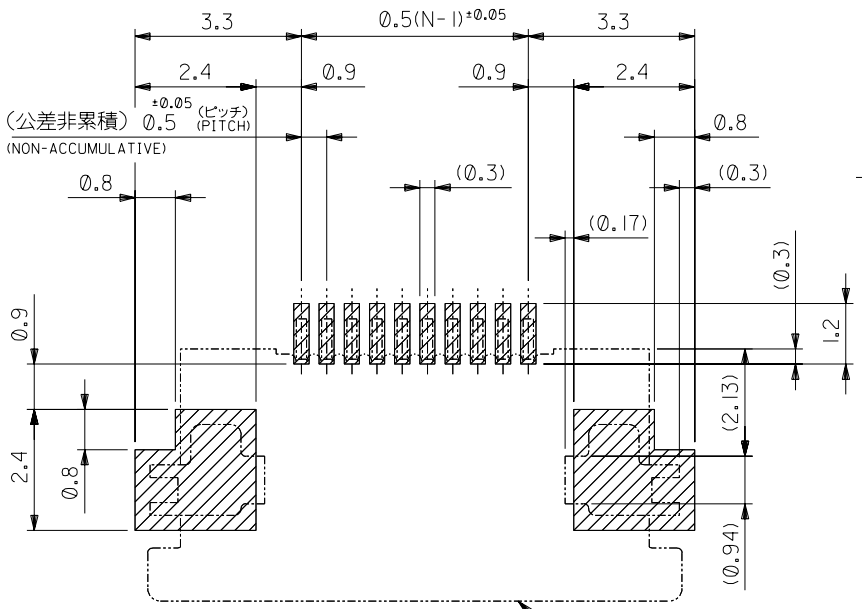
THIS DRAWING CONTAINS INFORMATION THAT IS PROPRIETARY TO MOLEX INCORPORATED AND SHOULD NOT BE USED WITHOUT WRITTEN PERMISSION.

SIZE B

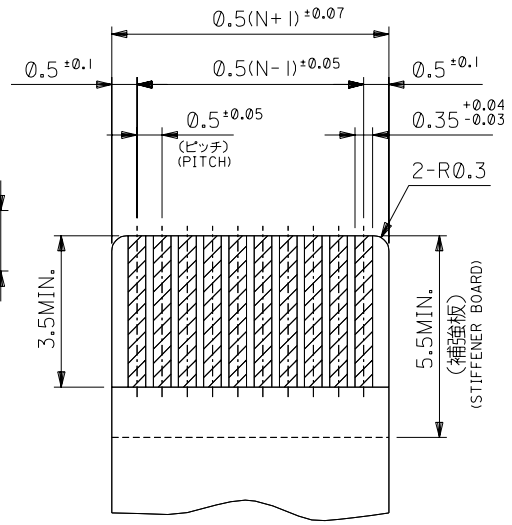
EN-02J(097) MXJ-54

SD-54104-023.S01

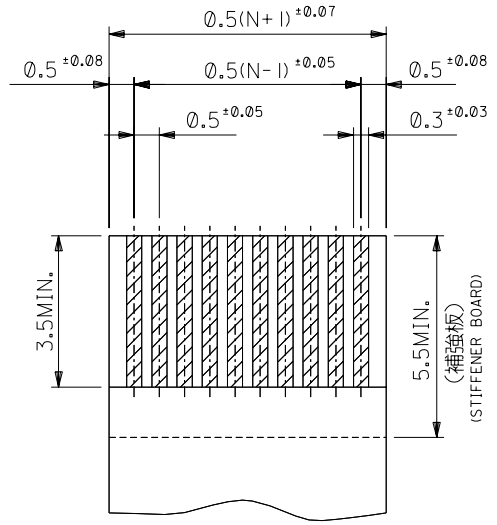
DWG. NO. SD-54104-023




参考基板レイアウト
RECOMMENDED P.C.BOARD PATTERN DIMENSION (REF.)
(マウント面)
(MOUNTING SIDE)




適合ＦＰＣ推奨寸法
APPLICABLE FPC RECOMMENDED DIMENSION
(仕上がり厚さ：0.3±0.03)
(THICKNESS:0.3±0.03)




適合ＦＦＣ推奨寸法
APPLICABLE FFC RECOMMENDED DIMENSION
(仕上がり厚さ：0.3±0.03)
(THICKNESS:0.3±0.03)

## 注記 NOTES

1. 使用材料 MATERIAL

| | | |
|---|---|---|
| ハウジング HOUSING | ：46ナイロン、UL94V-0 | 46NYLON |
| アクチュエータ ACTUATOR | ：PPS、UL94V-0 | |
| ターミナル TERMINAL | ：リン青銅、銅下地半田メッキ（t＝0．2） | PHOS-BRO.TIN-LEAD(9:1) 3～5 MICRON METER OVER COPPER 1～2.5 MICRON METER PLATED |
| 金具 FITTING NAIL | ：リン青銅、銅下地半田メッキ（t＝0．2） | PHOS-BRO.TIN-LEAD(9:1) 3～5 MICRON METER OVER COPPER 1～2.5 MICRON METER PLATED |

2. エンボステープ梱包時は、アクチュエータがロックした状態とする。
IN THE PACKAGE,ACTUATOR OF PART NO.54104-**37 SHOULD BE LOCKED.

3. ソルダーテール半田付け面のズレ量、及び金具半田付け面のズレ量は、基準面 H に対し上方向 0．1 MAX.下方向 0．15MAX.とし、相互のバラツキ量は、0．1MAX.とする。
MISALIGNMENT OF SOLDER TAILS AND FITTING NAILS FROM H
UPPER DIRECTION: 0.1 MAX. , LOWER DIRECTION: 0.15MAX.
OFFSET BETWEEN UPPER AND LOWER 0.1 MAX.

4. 偶数極に適用。
APPLY FOR EVEN CIRCUIT.

5. パターンはくり止め用金具
FITTING NAIL FOR PREVENTION OF PEELING OF P.C.B. PATTERN.

ＦＰＣ／ＦＦＣについて

打抜き方向は導体側から補強板側を推奨いたします。
導体部については軟銅箔３５マイクロメーターまたは５０マイクロメーター
メッキ厚　３～９マイクロメーター錫または半田メッキ（電気メッキ）

RECOMMENDED PUNCHER DIRECTION:
FROM CONDUCTOR SIDE TO STIFFENER BOARD SIDE.
RECOMMENDED CONDUCTOR SPEC.:
THICKNESS OF SOFT COPPER FOIL:
35 micrometer or 50 micrometer
TIN OR SOLDER PLATING:
3~9 micrometer(ELECTRICAL PLATING)

| REV | DESCRIPTION | DRWN | CH'K | APPR |
|---|---|---|---|---|
| B | 変更 REVISED '03/04/17 ECN NO. J2003-2624 | K.TOJO | M.SASAO | M.SASAO |
| A | 変更 REVISED '02/10/15 ECN NO. J2003-0977 | K.TOJO | M.SASAO | M.SASAO |
| 0 | 新規作成 RELEASED '00/12/13 ECN NO. JC2001-0415 | N.YANO | S.KUNISHI | M.FUKUSHIMA |

MATERIAL 材料: 注記参照 SEE NOTES
FINISH 仕上げ
WIRE RANGE 適用電線範囲
INS. RANGE 被覆外径

GENERAL TOLERANCES: (UNLESS SPECIFIED) 一般公差

| | |
|---|---|
| 10 UNDER 未満 | ±0.2 |
| 10 OVER 以上 30 UNDER 未満 | ±0.25 |
| 30 OVER 以上 | ±0.3 |
| ANGLE 角度 | ±3° |

SCALE | DESIGN UNITS ☒mm ☐INCH | THIRD ANGLE PROJECTION
DIMENSIONS: ☐mm INCH ☐INCH mm ☒mm ONLY | SHT | REV | REVISE ON CAD ONLY
DRAWN BY & DATE N.YANO '00/12/13
CHECKED BY & DATE S.KUNISHI '00/12/13
APPROVED BY & DATE M.FUKUSHIMA '00/12/13
CAD FILENAME SD-54104-023.S02
MATERIAL NO. 54104-**37
DRAWING NO. SD-54104-023
SHEET NO. 2 OF 2

TITLE: 0.5 FPC Conn Zif Hsg Assy for SMT RA Upr Cont

molex MOLEX INCORPORATED

THIS DRAWING CONTAINS INFORMATION THAT IS PROPRIETARY TO MOLEX INCORPORATED AND SHOULD NOT BE USED WITHOUT WRITTEN PERMISSION.

SIZE B

SD-54104-023.S02

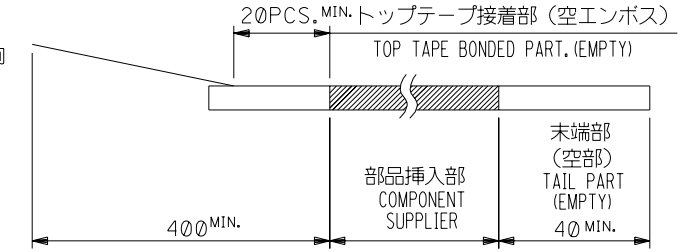
DO NOT SCALE DRAWING

EN-02J(097) MXJ-54

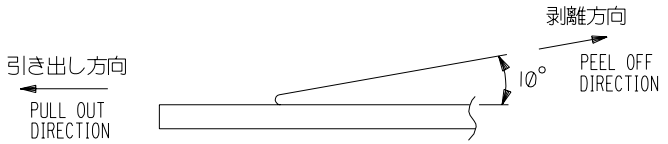
DWG. NO. SD-54104-024

NOTES

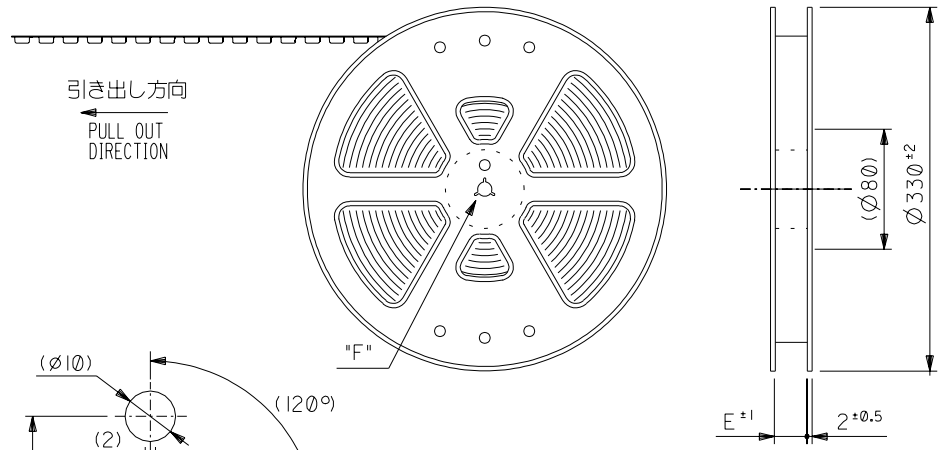
1. 梱包数量：１５００個／リール
   NUMBER OF CONNECTORS : 1500PCS/REEL
2. リードテープ長さ LEAD TAPE LENGTH

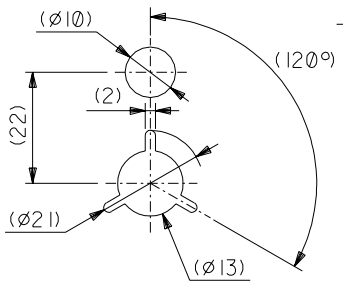



3. トップテープの剥離強度：0.1N ～ 0.7N(10.2gf ～ 71.4gf)
   （剥離方向は下図参照）
   尚、本規格値は出荷時に適用。（但し、輸送時に剥離が発生しないこと。）
   PEELING OFF FORCE OF TOP TAPE : 0.1N ～0.7N(10.2gf ～ 71.4gf)
   (PEELING DIRECTION AS SHOWN IN FOLLOWING FIG,)
   THIS REQUIREMENT SHOULD BE APPLIED AT SHIPMENT.
   PEEL OFF SHOULD NOT BE ALLOWED , DURING TRANSPORTATION.




4. 材料(MATERIAL)
   キャリアテープ(CARRIER TAPE)：ポリプロピレン(POLYPROPYLENE)
   トップテープ(TOPTAPE)： PET , PE , PEF
   リール (REEL)：ポリスチレン(PS)<リサイクル材を含む>
   POLYSTYREN (PS) <RECYCLE MATERIAL CONTAINED>




DETAIL "F"

| REV | DESCRIPTION | DRWN | CH'K | APPR |
|---|---|---|---|---|
| A | 変更 REVISED 社内NO. J2003-0977 | '02/10/15 K.TOJO | M.SASAO | M.SASAO |
| Ø | 新規作成 RELEASED 社内NO. JC2001-0415 | '00/12/13 N.YANO | S.KUNISHI | M.FUKUSHIMA |

MATERIAL 材料: 注記参照 SEE NOTES
FINISH 仕上げ: //
WIRE RANGE 適用電線範囲: //
INS. RANGE 被覆外径: //

GENERAL TOLERANCES: (UNLESS SPECIFIED) 一般公差

| | |
|---|---|
| 10 UNDER 未満 | ±0.2 |
| 10 OVER 以上 30 UNDER 未満 | ±0.25 |
| 30 OVER 以上 | ±0.3 |
| ANGLE 角度 | ±3° |

SCALE | DESIGN UNITS ☒mm ☐INCH | 3RD ANGLE PROJECTION | DIMENSIONS: ☐mm INCH ☐INCH mm ☒mm ONLY | SHT | REV

DRAWN BY & DATE N.YANO '00/12/13
CHECKED BY & DATE S.KUNISHI '00/12/13
APPROVED BY & DATE M.FUKUSHIMA '00/12/13
CAD FILENAME SD-54104-024.S01
MATERIAL NO. 54104-**92
DRAWING NO. SD-54104-024
SHEET NO. 1 OF 2

TITLE: Embstp Pkg for 0.5 FPC Conn Zif Hsg Assy

molex MOLEX INCORPORATED

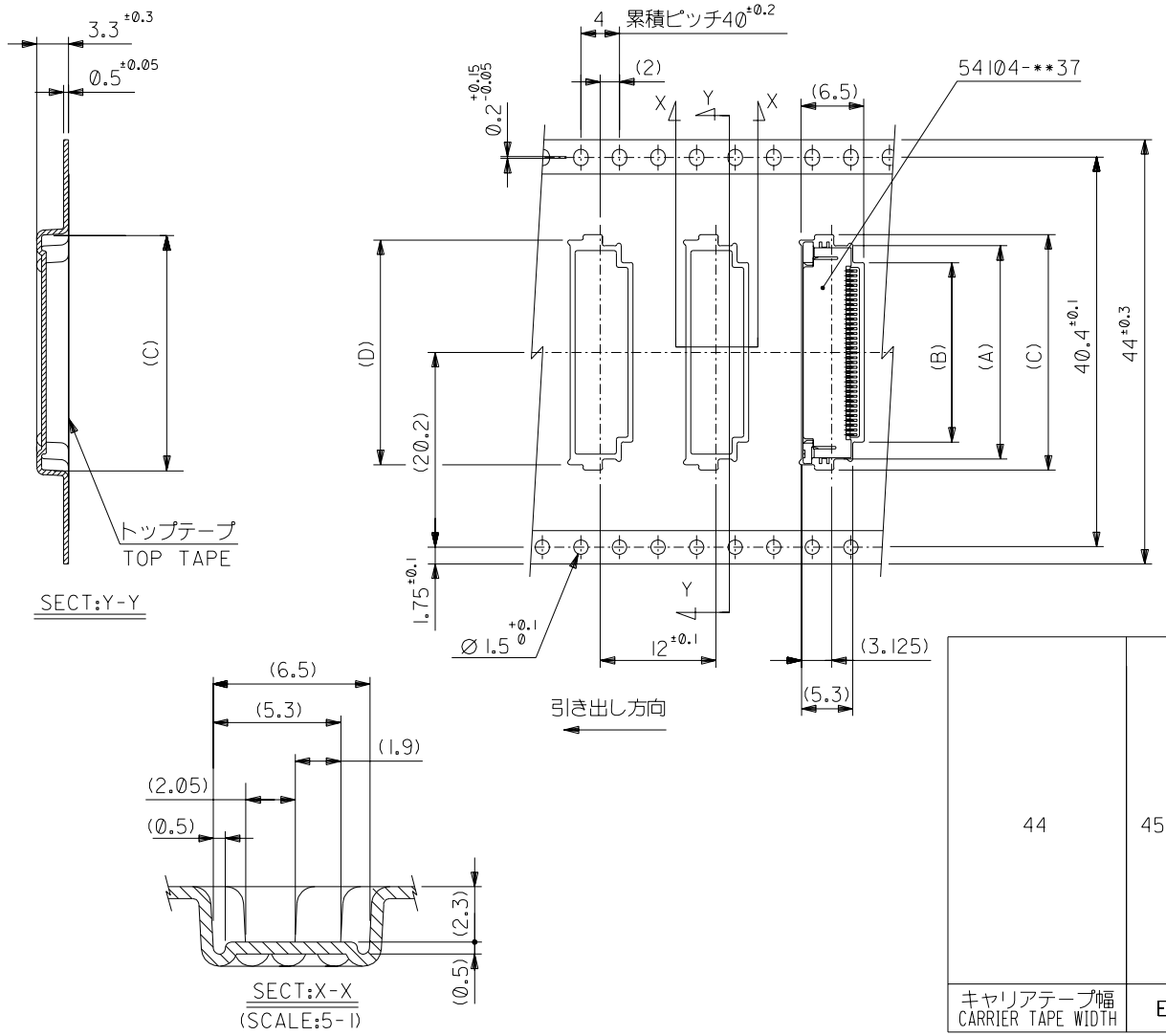
THIS DRAWING CONTAINS INFORMATION THAT IS PROPRIETARY TO MOLEX INCORPORATED AND SHOULD NOT BE USED WITHOUT WRITTEN PERMISSION.

SIZE B

DO NOT SCALE DRAWING

SD-54104-024.S01

EN-02J(097) MXJ-54




| | | | | | | | |
|---|---|---|---|---|---|---|---|
| 44 | 45.5 | 30.8 | 31.9 | 26.1 | 29.6 | 54104-5092 | 50 |
| | | 28.8 | 29.9 | 24.1 | 27.6 | -4692 | 46 |
| | | 28.3 | 29.4 | 23.6 | 27.1 | -4592 | 45 |
| | | 27.3 | 28.4 | 22.6 | 26.1 | -4392 | 43 |
| | | 25.8 | 26.9 | 21.1 | 24.6 | -4092 | 40 |
| | | 24.8 | 25.9 | 20.1 | 23.6 | -3892 | 38 |
| | | 23.8 | 24.9 | 19.1 | 22.6 | -3692 | 36 |
| | | 23.3 | 24.4 | 18.6 | 22.1 | -3592 | 35 |
| | | 22.8 | 23.9 | 18.1 | 21.6 | -3492 | 34 |
| | | 22.3 | 23.4 | 17.6 | 21.1 | -3392 | 33 |
| | | 21.8 | 22.9 | 17.1 | 20.6 | -3292 | 32 |
| | | 20.8 | 21.9 | 16.1 | 19.6 | 54104-3092 | 30 |
| キャリアテープ幅 CARRIER TAPE WIDTH | E | D | C | B | A | MATERIAL NO. | CKT. |

DO NOT SCALE DRAWING

DWG. NO. SD-54104-024

| REV | DESCRIPTION | DRAWN | CH'K | APPR |
|---|---|---|---|---|
| A | 変更 REVISED '02/10/015 ECN NO. J2003-0977 | K.TOJO | M.SASAO | M.SASAO |
| Ø | 新規作成 RELEASED '00/12/13 ECO NO. JC2001-0415 | N.YANO | S.KUNISHI | M.FUKUSHIMA |

MATERIAL 材料: SHEET 1 OF 2 参照 REFER TO SHEET 1 OF 2

FINISH 仕上げ

WIRE RANGE 適用電線範囲

INS. RANGE 被覆外径

GENERAL TOLERANCES: (UNLESS SPECIFIED) 一般公差

| | |
|---|---|
| 10 UNDER 未満 | ±0.2 |
| 10 OVER 以上 30 UNDER 未満 | ±0.25 |
| 30 OVER 以上 | ±0.3 |
| ANGLE 角度 | ±3° |

SCALE | DESIGN UNITS ☒mm ☐INCH | THIRD ANGLE PROJECTION | DIMENSIONS: ☐mm INCH ☐INCH mm ☒mm ONLY | SHT | REV

DRAWN BY & DATE: N.YANO '00/12/13

CHECKED BY & DATE: S.KUNISHI '00/12/13

APPROVED BY & DATE: M.FUKUSHIMA '00/12/13

CAD FILENAME: SD-54104-024.S02

TITLE: Embstp Pkg for 0.5 FPC Conn Zif Hsg Assy

molex MOLEX INCORPORATED

MATERIAL NO.: 54104-**92

DRAWING NO.: SD-54104-024

SHEET NO.: 2 OF 2

THIS DRAWING CONTAINS INFORMATION THAT IS PROPRIETARY TO MOLEX INCORPORATED AND SHOULD NOT BE USED WITHOUT WRITTEN PERMISSION.

SIZE B

SD-54104-024.S02

EN-02J(097) MXJ-54