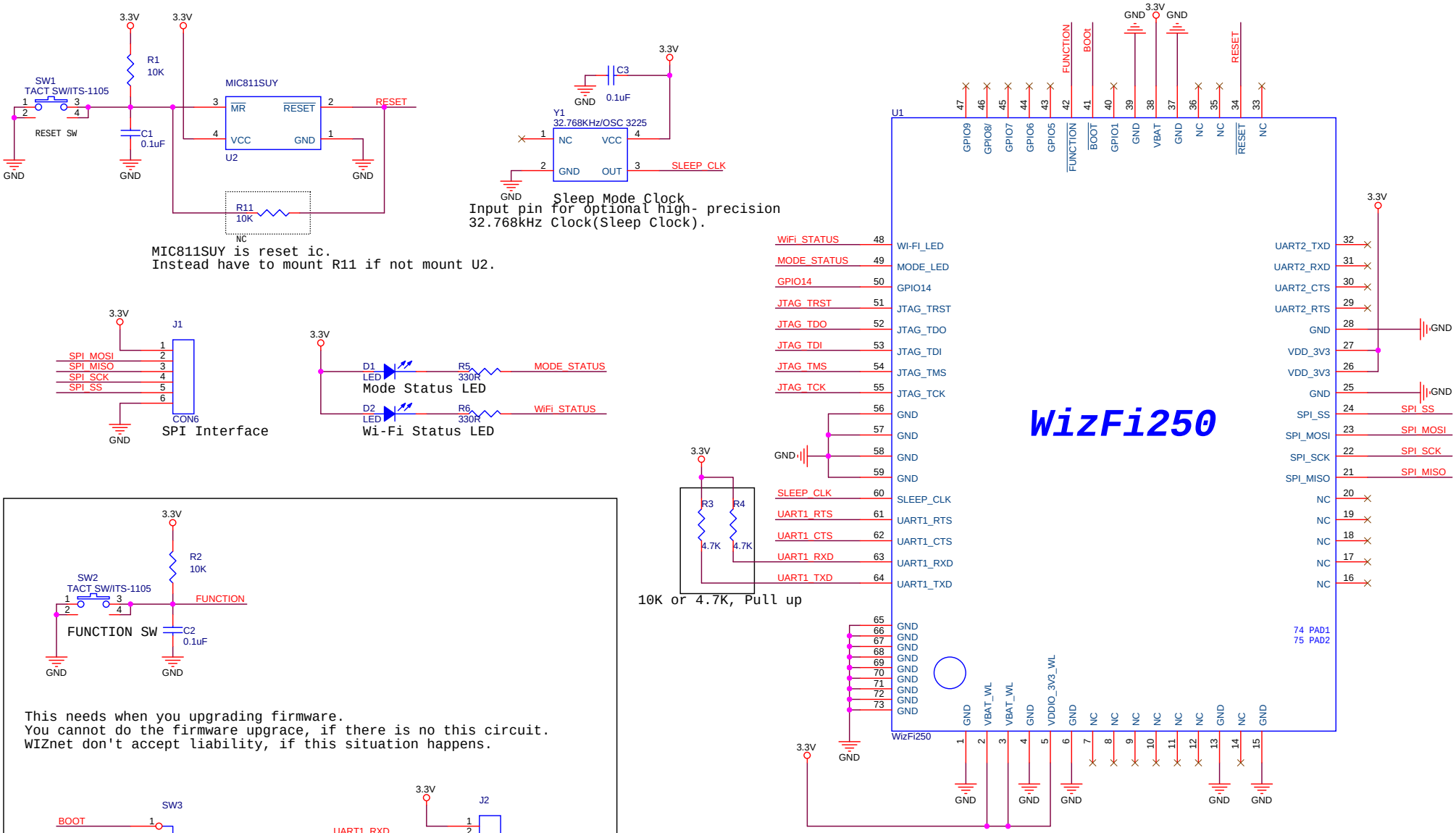
SW1
TACT SW/ITS-1105
RESET SW
R1
10K
C1
0.1uF
MIC811SUY
MR
RESET
VCC
GND
U2
R11
10K
NC
MIC811SUY is reset ic.
Instead have to mount R11 if not mount U2.
C3
0.1uF
Y1
32.768KHz/OSC 3225
NC
VCC
GND
OUT
SLEEP_CLK
Sleep Mode Clock
Input pin for optional high- precision
32.768kHz Clock(Sleep Clock).
J1
SPI_MOSI
SPI_MISO
SPI_SCK
SPI_SS
CON6
SPI Interface
D1
LED
R5
330R
MODE_STATUS
Mode Status LED
D2
LED
R6
330R
WiFi_STATUS
Wi-Fi Status LED
R3
R4
4.7K
4.7K
10K or 4.7K, Pull up
U1
WiFi250
WiFi_STATUS
MODE_STATUS
GPIO14
JTAG_TRST
JTAG_TDO
JTAG_TDI
JTAG_TMS
JTAG_TCK
SLEEP_CLK
UART1_RTS
UART1_CTS
UART1_RXD
UART1_TXD
WI-FI_LED
MODE_LED
GPIO9
GPIO8/
GPIO7
GPIO6
GPIO5
FUNCTION
BOOT
GPIO1
VBAT
RESET
UART2_TXD
UART2_RXD
UART2_CTS
UART2_RTS
VDD_3V3
SPI_SS
SPI_MOSI
SPI_SCK
SPI_MISO
VBAT_WL
VDDIO_3V3_WL
74 PAD1
75 PAD2
WizFi250
R2
10K
SW2
TACT SW/ITS-1105
FUNCTION
FUNCTION SW
C2
0.1uF
This needs when you upgrading firmware.
You cannot do the firmware upgrace, if there is no this circuit.
WIZnet don't accept liability, if this situation happens.
SW3
BOOT
ITS-12H
Boot PIN Floating : Run Mode
Boot PIN Low : Boot Mode
J2
UART1_RXD
UART1_TXD
CON4
UART Interface
WIZnet
Title
WizFi250 Ref.Schematic
Size
B
Document Number
WizFi250 Ref.Schematic
Rev
<RevCode>
Date:
Wednesday, November 06, 2013
Sheet
1
of
1